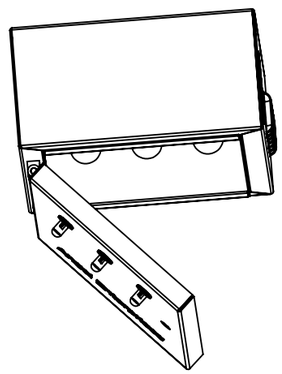

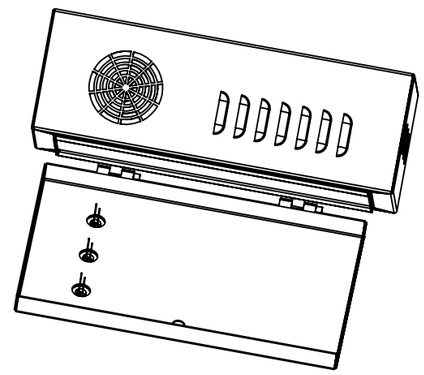

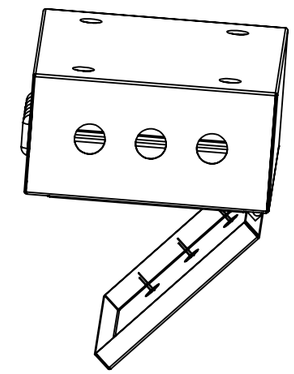

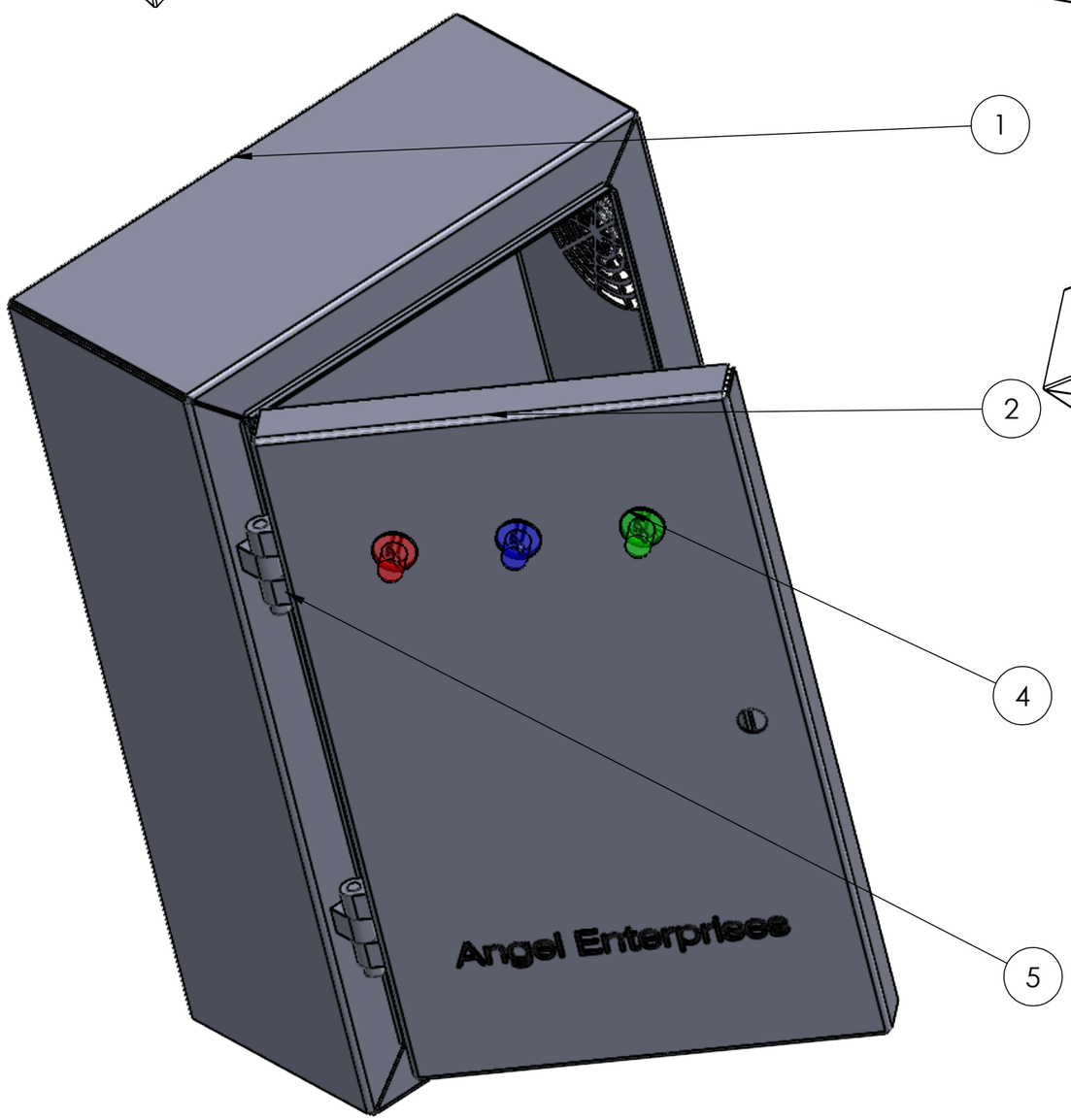


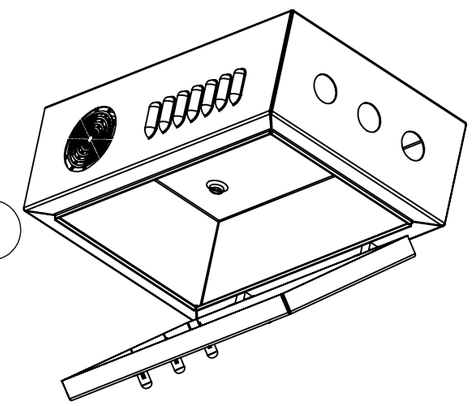

| ITEM NO. | PART NUMBER | QTY. |
|---|---|---|
| 1 | Part1 main body | 1 |
| 2 | Part2 door | 1 |
| 3 | Part3 wire | 3 |
| 4 | Part4 bulb | 3 |
| 5 | Part4 nut | 2 |

UNLESS OTHERWISE SPECIFIED:
DIMENSIONS ARE IN MILLIMETERS
SURFACE FINISH:
TOLERANCES:
LINEAR:
ANGULAR:

FINISH:

DEBURR AND BREAK SHARP EDGES

DO NOT SCALE DRAWING

REVISION

| | NAME | SIGNATURE | DATE |
|---|---|---|---|
| DRAWN | DHEERAJ KUMAR | | |
| CHK'D | | | |
| APPV'D | | | |
| MFG | | | |
| Q.A | | | |

TITLE:

MATERIAL:

WEIGHT:

DWG NO.
Electrical Enclosure

A3

SCALE:1:5

SHEET 1 OF 1

SOLIDWORKS Educational Product. For Instructional Use Only.